BILL OF MATERIALS			
ITEM NO.	PART NUMBER	MATERIAL	QTY.
1	PIKL-1001	1.0116 (S235J2G3)	1
2	PIKL-1003	DIN 976-1 8.8	1
3	PIKL-1011	ISO 7089 200HV	1
4	PIKL-1012	ISO 4032 8.8	1
5	PIKL-1013	ISO 4035 8.8	1
6	PIKL-1002	1.0570 (S355J2G3)	1

WELD TABLE					
ITEM NO.	WELD SIZE	SYMBOL	WELD LENGTH	WELD MATERIAL	QTY.
1	3.00	◺	60.46		1

TECHNICAL REQUIREMENTS FOR MANUFACTURING	
FABRICATION	
EXECUTION CLASS	EXC2
CONSEQUENCE CLASS	CC2
SERVICE CATEGORY	SC1
PRODUCT CATEGORY	PC2
WELDS	
WELD CLASS	C, EN ISO 5817
WELDS, GENERAL NOTE	1,0*t
SURFACE FINISH	
SURFACE PREPARATION GRADE	PICKLING
SURFACE FINISH	HOT-DIP GALVANIZED, SFS-EN ISO 1461
MINIMUM COATING THICKNESS AND MASS ON SAMPLE ACCORDING TO SFS-EN ISO 1461 TABLE 3 AND TABLE 4	

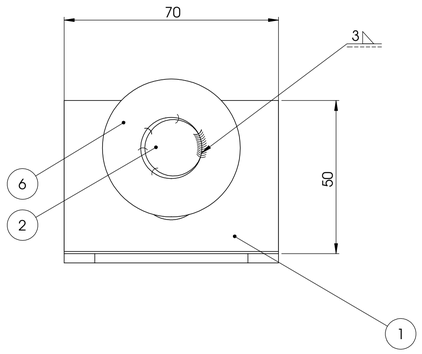

TOP

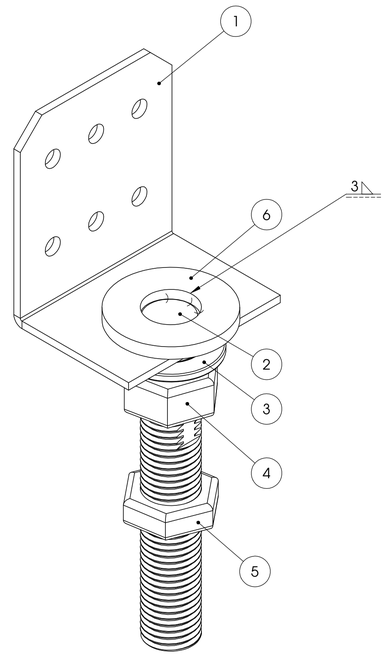

3D

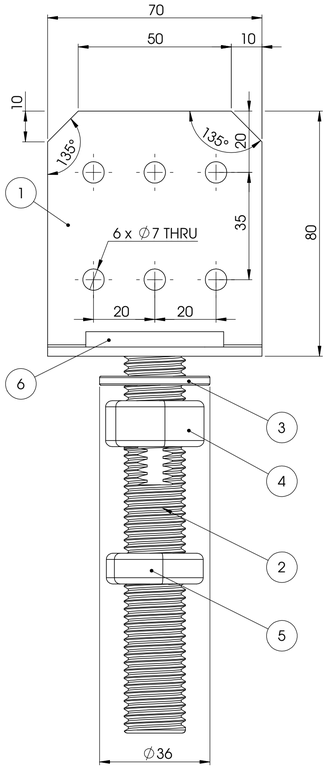

FRONT

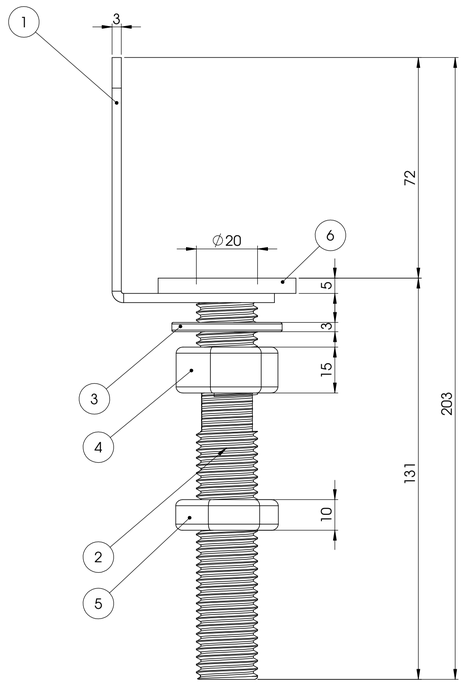

SIDE

REV	CHANGE DESCRIPTION	DATE	DRAWER	CHECKER
-	-	-	-	-

PRELIMINARY

DISTRICT	BLOCK	SITE	ATHORITIES ARCHIVE NOTES
-	-	-	

CONSTRUCTION MEASURE: -

DRAWING TYPE: STRUCTURAL DRAWING

PROJECT NAME:
BCE PERUSTUS
LÅNGMOSSVÄGEN 6
68530 PEDERSÖRE

DRAWING CONTENT: ASSEMBLY DRAWING, COLUMN SHOE, P-PIK 50X70

SCALES: 1:1, -, -

DRAWER	DESIGNER	CHECKER	DATE	DESIGN GROUP	PROJECT NUMBER	DRAWING NUMBER	REVISION
NBj	JAs	JAs	2023-02-08	STR	1297-22	PIK-101	-

KRONQVIST
INGENJÖRSBYRÅ • INSINÖÖRITOIMISTO

Topeliusespl. / Topeliuksenpuist. 12 66900 NYKARLEBY / UUSIKAARLEPYY
Köpmansg. / Kauppiaank. 6 68600 JAKOBSTAD / PIETARSAARI
tel/puh: 06-78 10 800
email: info@kronqvist.com www.kronqvist.com